CONFIDENTIAL--THIS DRAWING CONTAINS PROPRIETARY INFORMATION THAT IS THE PROPERTY OF JOHN BEAN TECHNOLOGIES CORPORATION AND MUST BE IMMEDIATELY RETURNED UPON REQUEST. INFORMATION CONTAINED HEREIN SHALL NOT BE DUPLICATED, DISCLOSED OR USED FOR ANY PURPOSE OTHER THAN THE BUSINESS OF JOHN BEAN TECHNOLOGIES CORPORATION OR BY ITS AUTHORIZED CONTRACTORS WITHOUT WRITTEN CONSENT BY JOHN BEAN TECHNOLOGIES CORPORATION.

ZONE	REV	DESCRIPTION	BY	DATE

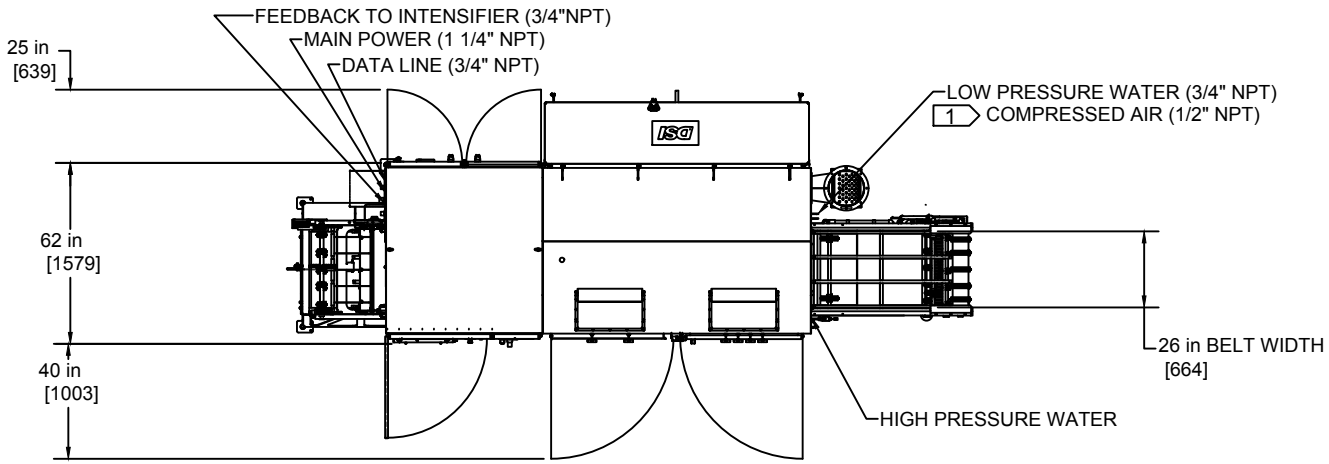

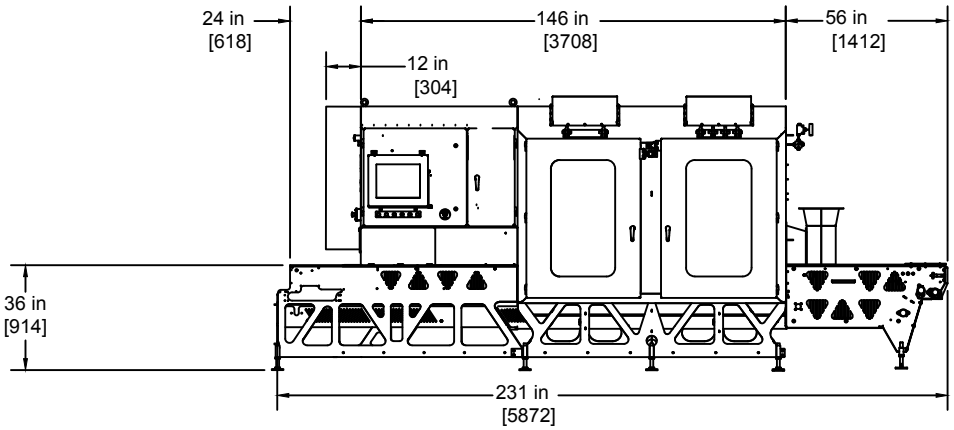

NOTES:
UNLESS OTHERWISE SPECIFIED:

1 COMPRESSED AIR REQUIRED IF JET BLOCKERS ARE INSTALLED.

UNLESS OTHERWISE SPECIFIED
DIMENSIONS IN INCHES
FRACTIONAL: ± 1/32
DECIMAL: .X ± .05
.XX ± .01
.XXX ± .005
ANGULAR: ± 1°
FINISH: 32RMS
BREAK SHARP EDGES .002-.010

JBT FoodTech

DSI
10304 NE 95TH ST.
REDMOND, WA 98052
PH: (425) 883-1101
FAX: (425) 882-2052

K, 844S, PB/SHORT/PTS

DRAWN: ES		SIZE	DWG NO	REV	SHEET
CHECKED: GC		B	80-0256	-	1 OF 1
ENGINEER: ES	11/21/17				